CONDENSER MONITORING SYSTEM

with

RheoVac® and *Rheotherm*® Instruments

Installation & Operation Manual

INTEK

Certified to ISO 9001:2008

Intentionally left blank

TABLE OF CONTENTS

© Intek, Inc. 2015

WARRANTY

Intek, Inc. warrants each *Rheotherm*, *RheoVac* and *CMS* product to be free from defects in material and workmanship under normal use and service; Intek's obligation under this warranty being limited to making good any part or parts thereof which shall, within one (1) year after delivery of such product to the original purchaser, be returned to Intek with transportation charges prepaid and which Intek's examination shall disclose to its satisfaction to have been thus defective; this warranty being expressly in lieu of all other warranties, express or implied and all other obligation or liabilities on Intek's part. The purchaser will assume all responsibility and expense for removal, decontamination and reinstallation of equipment.

Rheotherm flow meters are manufactured under United States patent numbers 4,255,968, 4,942,763, 4,949,578 and 5,445,018. *Rheotherm* circulating water flow and fouling meters are patent pending in the USA. *RheoVac* instruments are manufactured under United States patent numbers 4,255,968, 5,485,754, 5,752,411 and 6,526,755. *CMS* products incorporate *Rheotherm* and *RheoVac* technology as well as technology under US patent numbers 6,526,755, 7,065,970, 7,926,277 and international patents. Intek, *Rheotherm*, and *RheoVac* are registered trademarks of Intek, Inc.

© Intek, Inc. 2015

SECTION 1 - GENERAL INFORMATION

1.1 INTEK'S POWER INDUSTRY SERVICES

Intek manufactures *RheoVac* condenser and air in-leak monitors, *Rheotherm* circulating water flow and fouling meters, flow meters, flow switches, as well as specialty temperature and pressure measurement instruments. These specialty instruments for the power industry provide continuous monitoring of critical steam surface condenser parameters important to plant thermal performance and life cycle.

The data from these instruments have been used to gain a unique comprehensive understanding of steam surface condensers and the condensation process. This understanding has enabled Intek to help customers troubleshoot condensers with greater speed and accuracy than ever before. Intek has expanded service offerings and developed an online information website for steam surface condensers, available at www.MyCondenser.com.

Intek has also taken advantage of its aerospace design tools and design expertise for the purpose of retrofitting condensers to maximize performance and improve condensate chemistry. Intek has transformed underperforming condensers into some of the best performing condensers in the world.

The condenser services team under Dr. Joseph Harpster's leadership has also sought to educate the industry by contributing volumes of material to ASME and EPRI regarding proper condenser measurement and steam flow dynamics. Intek conducts a unique Condenser Operations and Management Workshop for continuing education purposes. Tutorials and case studies are also available at www.MyCondenser.com for registered users.

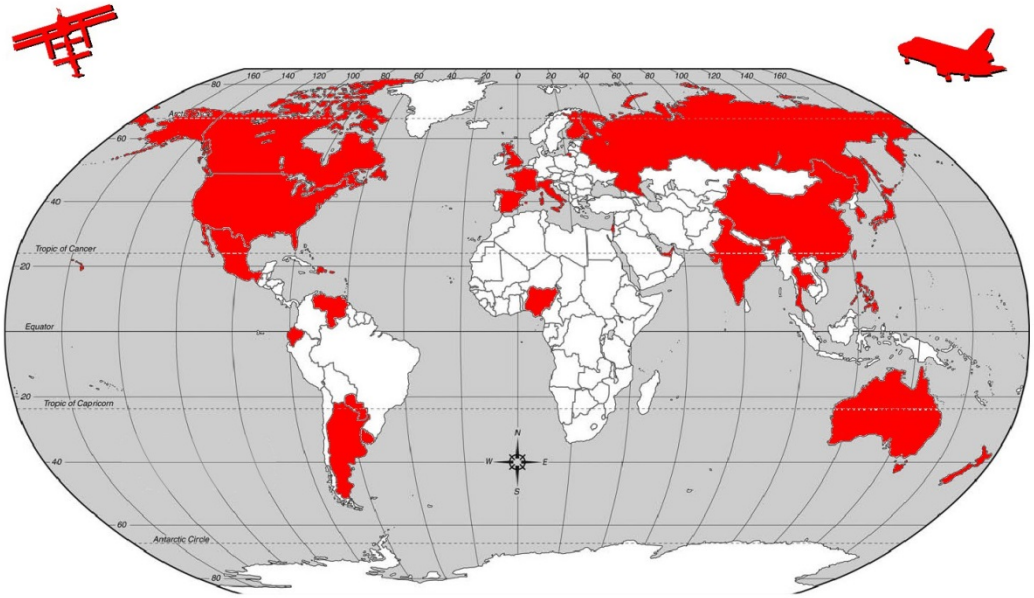

Intek is The Gateway to
Improved Condenser Performance, Fast Response Maintenance and Optimized Operations

© Intek, Inc. 2015

1.2 PURPOSE AND FUNCTION

The Condenser Monitoring System (CMS) integrates unique instruments allowing comprehensive examination of condenser performance. These unique instruments are specifically designed to provide direct measurement of performance degradation mechanisms and data that exceed the requirements of instrumentation outlined in ASME PTC 12.2. A complete system will provide data used to derive information for quantifying specific degradation mechanisms such as microfouling, macrofouling, cooling water flow, waterbox fill, air binding, low vacuum equipment capacity and condensate inundation. This information can also be used to evaluate the cooling water system changes, fouling control systems, waterbox eductors, vacuum equipment, and new or refurbished condenser commissioning. In essence, this system puts a microscope on your condensing heat exchanger and empowers engineers with direct measurements to organize actionable effort.

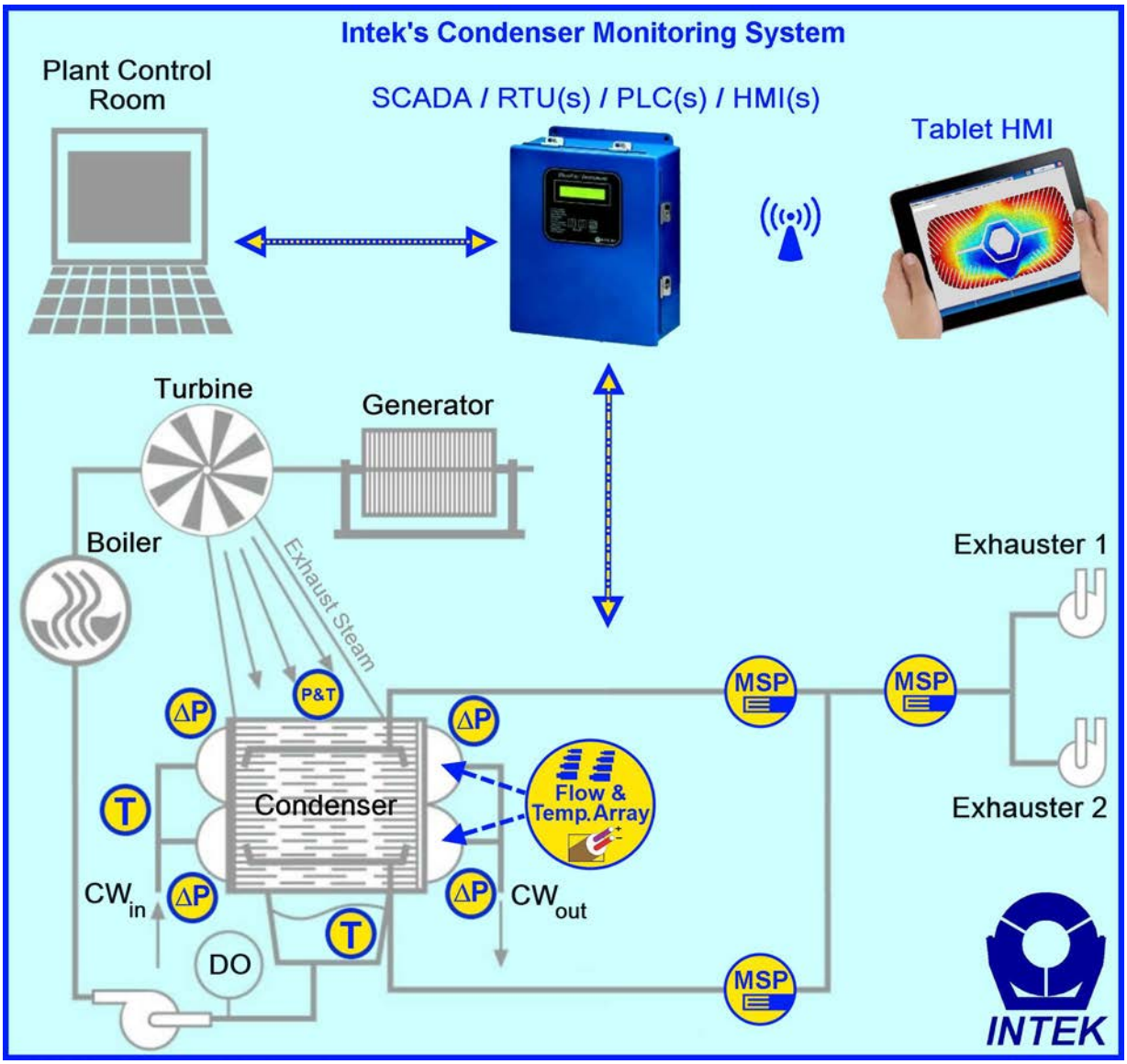

Illustration of the Condenser Monitoring System (CMS)
Used for comprehensive online continuous heat exchanger performance measurement and monitoring

© Intek, Inc. 2015

1.3 TECHNICAL SPECIFICATIONS – check custom page to determine which components apply to your CMS

1.3.1 Main Electronics (SCADA, RTU and HMI)

Input Power:
- 100-250 VAC, 50/60 Hz (UPS recommended)

Digital Communication:
- TCP/IP:
  - Windows File Share (SMB)
  - OPC
  - Modbus
  - Web Interface
  - Wireless (optional)
  - All TCP/IP options are enabled by default
- Serial:
  - RS-232 (Modbus) (optional)

Analog Communication:
- 4-20mA signals (optional)

Temperature Environment:
- Operating: 40 to 120°F (5 to 49°C)
- Storage: -20 to 158°F (-29 to 70°C)

Local Display (optional):
- LCD Screen
  - or
- 2 x 20 alphanumeric LCD – displays output parameters and diagnostic messages
- Parameter scrolling

Wireless Handheld Tablet (optional)

1.3.2 *RheoVac* Multi-Sensor Probe (MSP)

Typical Calibration Accuracy:
- ±5% of total mass flow

Repeatability:
- ±1.5% of reading

Operating Temperature:
- Electronics: 40 to 120°F (5 to 49°C)
- Probe: 40 to 158°F (5 to 70°C)
- **Never subject probe to temperatures above 210°F (99°C)**
- (high temperature protection optional, up to 450°F)

Operating Pressure:
- 0.5 to 10 inches Hg absolute
- 15 psia maximum

Storage Temperature:
- -20 to 185°F (-29 to 85°C)

Storage Pressure:
- 15 psig (maximum)

Process Connection:
- Ball valve assembly (1½" thread-o-let must be welded to pipe for installation)

Wetted Surface:
- 300 Series SS and engineered plastic (depending on model)

© Intek, Inc. 2015

1.3.3 *Rheotherm* Cooling Water Flow and Fouling (CWFF) Meters

Primary Calibration Accuracy:
Better than ±2% of reading
Flow Range:
2-20 ft/s (extended range optional)
Repeatability:
±0.5% of reading
Operating Temperature:
Electronics: 40 to 120°F (5 to 49°C)
Sensor: 40 to 140°F (5 to 60°C)
Operating Pressure:
60 psi (1000 psi optional)
Storage Temperature:
-20 to 140°F (-29 to 60°C)
Storage Pressure:
60 psig (maximum)
Wetted Surface:
300 Series SS (material options available)
Neoprene, Polyolefin (cable included)

1.3.4 Pressure/Temperature (PT) Probe

Accuracy:
±0.02 inches HgA for pressure
±0.1°F for temperature
Repeatability:
±0.5% of reading
Operating Temperature:
Electronics: 40 to 120°F (5 to 49°C)
Probe: 40 to 300°F (5 to 149°C)
Operating Pressure:
0.5 to 10 inches Hg absolute
15 psia maximum
Storage Temperature:
-20 to 185°F (-29 to 85°C)
Storage Pressure:
15 psig (maximum)
Process Connection:
Ball valve assembly (1½" thread-o-let must be welded to pipe for installation)
Wetted Surface:
300 Series SS

1.3.5 Thermocouple (TC) Temperature Sensors and Arrays

Temperature range:
40-175°F (higher temperature components optional)
Accuracy:
±0.2°F
Repeatability:
±0.1°F
Wetted Surface:
300 Series SS and thermoplastics

© Intek, Inc. 2015

1.3.6 High Spatial Density Temperature Sensor Arrays

Operating Temperature:
40 to 185°F (5 to 85°C)
Accuracy:
±0.15°F
Repeatability:
±0.1°F
Wetted Surface:
Proprietary

© Intek, Inc. 2015

1.4 WARNINGS ⚠, PRECAUTIONS ⚠ AND RECOMMENDATIONS ⓘ

⚠ **WARNING — Never operate any instruments at or subject them to temperatures or pressures beyond the specified limits. (See Section 1.3)**

⚠ Use reasonable care in handling the *RheoVac* and PT probes. Do not bend the probes, damage the tips, or obstruct the sensing ports. If moving or shipping the unit, make sure the probe is adequately protected from foreign objects and damage during handling and shipping; save and reuse factory provided custom probe protector and shipping boxes.

⚠ Keep the USB memory stick disconnected during normal operations to extend memory lifetime.

ⓘ All instruments should be serviced on a 1 or 2 year cycle to ensure all instruments are within specifications and electronics are maintained with appropriate software/hardware updates.

ⓘ Use the USB stick to retrieve data after the system has been online and flow has been established for at least 48 hrs. E-mail data to Intek for evaluation.

ⓘ Intek recommends using the RJ-45 network connection for all data traffic (as opposed to serial and 4-20 mA communication).

<u>*RheoVac* probes and PT probes</u>:

⚠ **WARNING — Be sure to power up your *RheoVac* probe(s) for at least 30 minutes before inserting probes into the vent line. DO NOT leave probe in vent line without power or when flooding the condenser.**

⚠ **WARNING — Never allow live high temperature steam to flow either direction in the exhauster line where a *RheoVac* probe is located. This can happen if steam jet ejectors are operated incorrectly.**

⚠ **WARNING — Do not allow *RheoVac* or PT probes to come into contact with liquid water, including water from condenser flooding (hydro testing) and entrained liquid water. Entrained liquid water is an indicator of poor condenser venting and may be present in your condenser vent line due to design configuration. See EPRI's "Air In-Leakage and Intrusion Prevention Guideline," TR 1014125. Intek offers analysis and design services to improve condenser venting and reduce or eliminate entrained liquid water and excess condenser back pressure.**

ⓘ **Recalibration every 2 years:** *RheoVac* probes and PT probes should be returned to the factory for inspection and calibration service every two years.

<u>*Rheotherm* CWFF and thermocouple sensor arrays</u>:

⚠ **WARNING — Ensure cleaning crews do not apply lateral pressure, "cock," to the cleaning guns; this can damage epoxy cladded tubesheets and the installed meters.**

⚠ **WARNING — Do not attempt to disassemble the meters/sensors – there are no user serviceable components.**

⚠ When cleaning condenser tubes, it is recommended to insert projectiles into the CWFF meter.

ⓘ Inspect the installation on a scheduled basis or as opportunities arise to ensure the epoxy coating is securely sealing the installed meters/sensors in place. Follow epoxy coating manufacturer's (Plastocor, Duromar, etc.) recommendations to touch up coat as required. Intek recommends annual inspections, as a minimum.

© Intek, Inc. 2015

SECTION 2 - INSTALLATION

2.1 HARDWARE INSTALLATION

2.1.1 *RheoVac* Multi-Sensor Probes

2.1.1.1 Selecting a Ball Valve Assembly Location (Hot Tap Compatible)

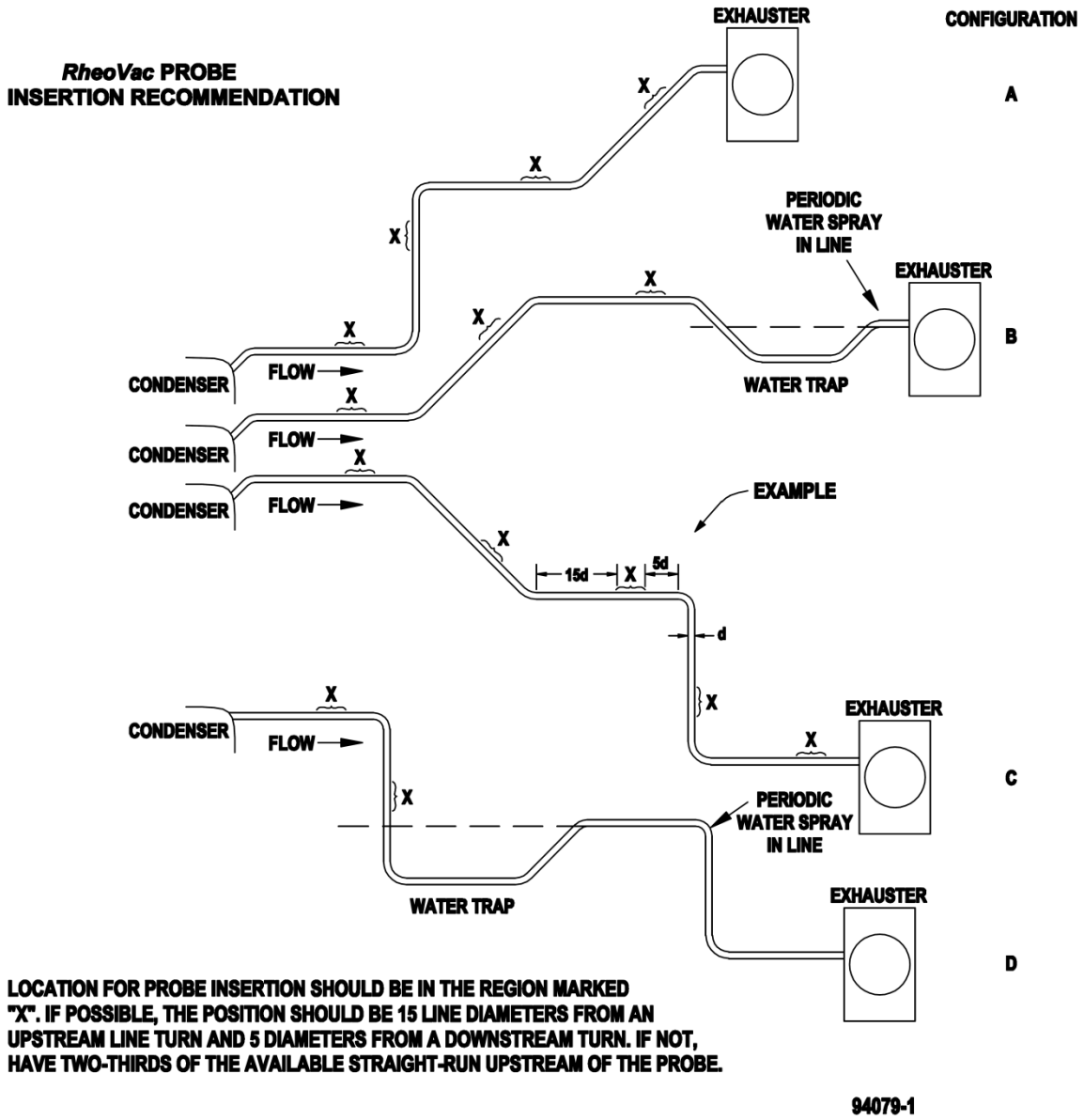

Figure 1: Recommended ball valve assembly locations

1. Select an easy to access location; location should be accessible for probe removal and maintenance.
2. Adhere to locations shown in Figure 1.
3. Verify there is a minimum probe insertion clearance of 4 feet (1.3m) between pipe surface at the tap location and any obstruction, refer to Figure 2.
4. Verify installation site is parallel to the floor, refer to Figure 2.
5. An additional ball valve assembly is required for high temperature model MSPs. Refer to SECTION 8 -CUSTOM INFORMATION for installation instructions.

© Intek, Inc. 2015

2.1.1.2 Ball Valve Installation

1. Be sure location is accessible for probe removal and maintenance.
2. Install mounting hardware. Drill a 1½" through-hole, center the thread-o-let over the hole and weld it onto the condenser vacuum pipe (see Figure 2). Thread the ball valve assembly into the thread-o-let. Use thread tape or pipe dope to seal the connection (Alternate: weld thread-o-let to pipe wall, then drill a 1¼" hole in pipe wall using a hot tap drill).
3. Make sure the probe installs parallel to the floor (see Figure 2).
4. Verify that the probe slides easily through the ball valve assembly and pipe penetration hole.

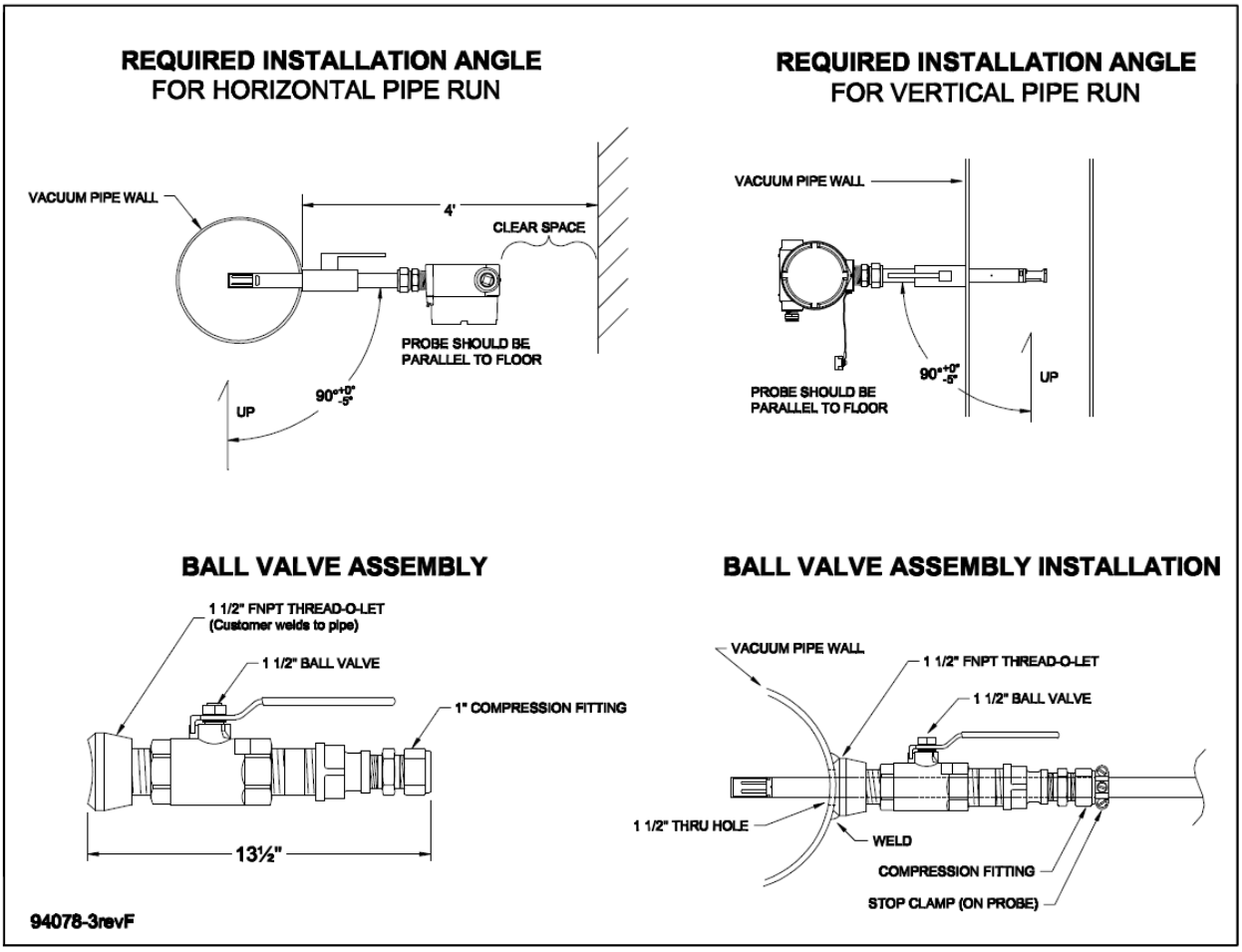

Figure 2: *RheoVac* MSP ball valve assembly installation detail

2.1.1.3 Installing/Removing Probe Instruments – refer to Figure 3

1. **Power** up your *RheoVac* MSP for at least 30 minutes before inserting probe into the vent line ball valves. ⚠**DO NOT leave probe in vent line without power or when flooding the condenser.**
2. **Prepare** each probe. Verify stop clamp location (see Figure 3). It is important that the stop clamp is securely in place which determines the position of the multi-sensor assembly and ensures that the probes do not contact the opposite pipe wall. Contact with the pipe wall could damage the probe. The clamp's location is set at the factory and is marked with a groove on each probe shaft. This location roughly places the thermal mass flow elements (two metal probe tips) in the center of the pipe. Refer to this mark if a stop clamp is inadvertently moved. Loosen the compression nut on the thermocouple connector of the ball valve assembly and clean the inner surface of the thermocouple connector to ensure it is free of particles that may cause probe damage.
3. **Insert** probe until the extraction line meets the compression nut and snug the compression nut.
4. **Install** each probe. When installing under vacuum, do not allow the clamp to "slam" against the seal nut upon opening the valve. Grasp the probe firmly, with hand against the seal nut, before opening the ball valve.
5. **Align** the FLOW arrow to the direction of flow and the centerline of the pipe.
6. When removing the probe, loosen the compression nut on the thermocouple connector of the ball valve assembly and slowly extract the probe until the Extraction Line is visible (see Figure 3). This indicates that the probe is clear of the ball valve. Close the ball valve, then remove the probe from the assembly.

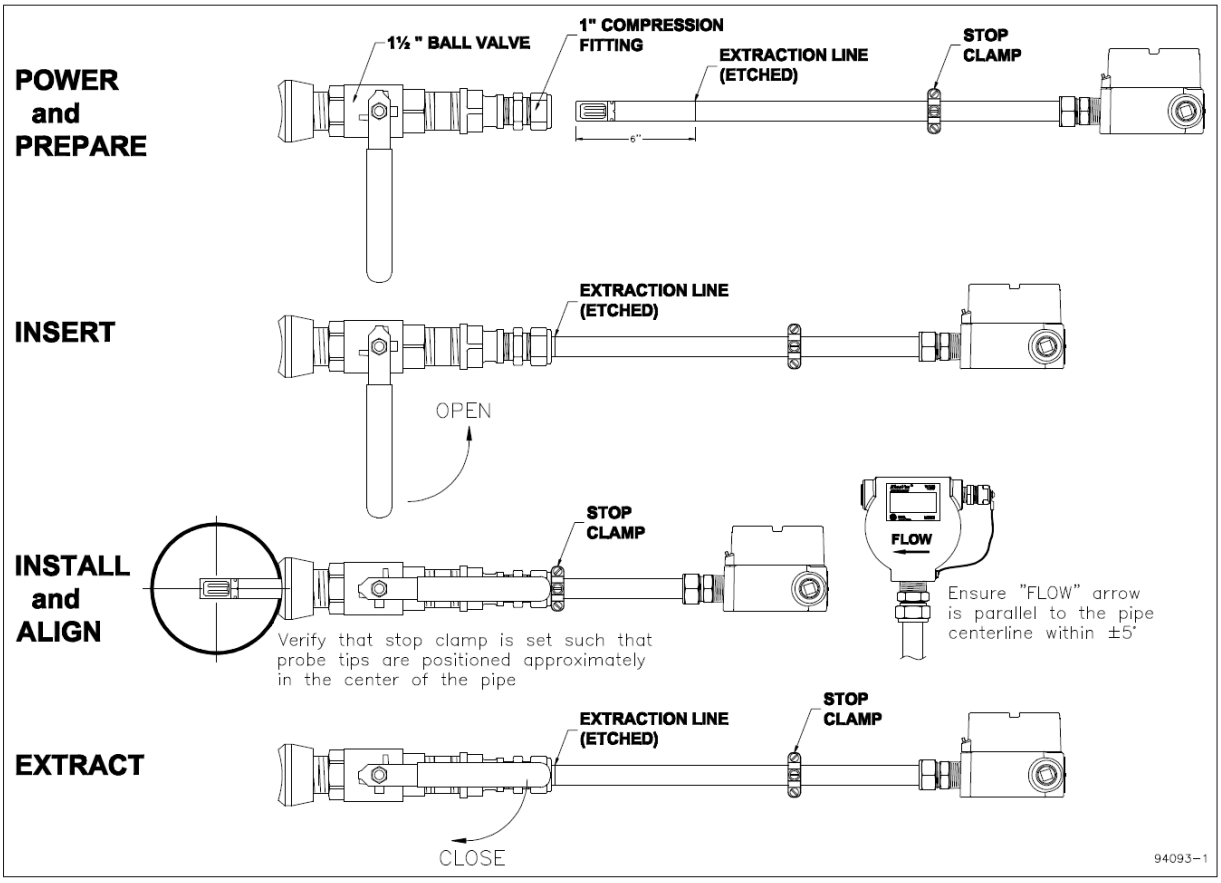

Figure 3: Installing and removing probe instruments

© Intek, Inc. 2015

2.1.2 PT Probes

The PT probe(s) is installed through a ball valve similar to that shown in Figure 2 and Figure 3. Special instructions, where applicable, are provided by Intek (see SECTION 8 - CUSTOM INFORMATION).

2.1.3 *Rheotherm* CWFF Meters and Temperature Sensors

These instruments are installed by Intek Inc. or under Intek Inc.'s supervision. The installation ensures proper seating/anchoring of the sensors in the selected locations. Wiring is fully coated using epoxy coating that is proven for underwater application.

© Intek, Inc. 2015

2.2 ELECTRICAL CONNECTIONS

A typical system with a model 950 *RheoVac* MSP is shown in Figure 4. Additional instruments can be connected to the RS-485 bus per the EIA-485 standard.

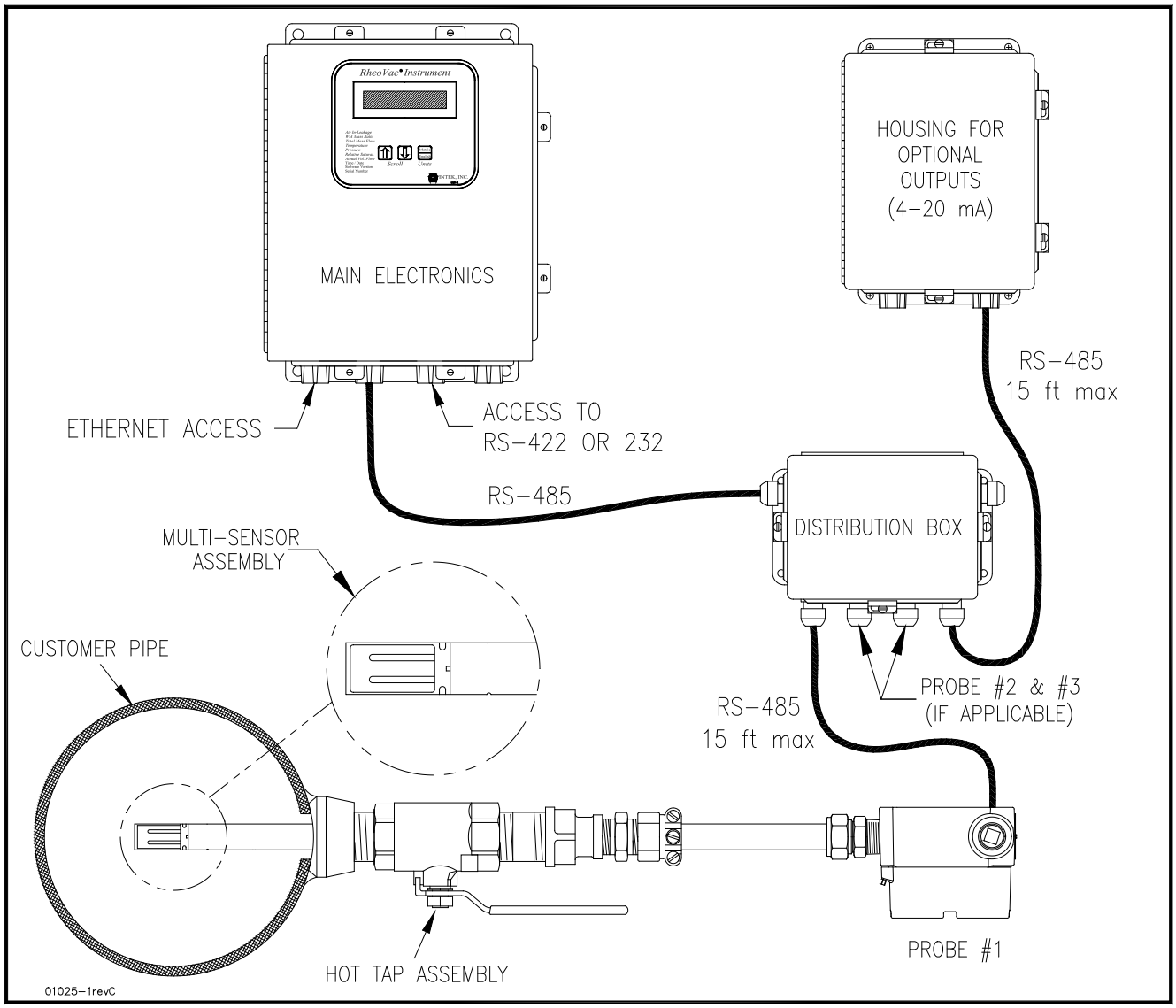

Figure 4: Typical system configuration with one *RheoVac* MSP

IMPORTANT — Inspect and **VERIFY** these electrical connections carefully. Improper connection could damage electronic components and sensor function. If additional holes need to be drilled in the processor enclosure, remove the electronics subassembly (mounted on a mounting plate) and temporarily store inside an ESD bag in a safe, clean place. Do not drill with electronics boards inside the enclosure.

© Intek, Inc. 2015

2.2.1 Main Electronics – contains the SCADA and HMI components

1. Transmitter(s) Power/COM: A DeviceNet 5711 cable is used all probe/sensor/4-20mA transmitters. The color code for this cable is: ***RS-485 communications***: white (A), blue (B) and shield (SH); ***power***: 24Vdc, red (+), and black (–).
2. Main Power: Power connection wires should be at least 18 AWG. Connect main power terminals to a dedicated 120 or 240 VAC, single phase, 15-amp circuit. A main power switch is provided near the input power terminals.
3. Network Communication (**Recommended**): An Ethernet connection (RJ-45 style jack) is provided. Intek recommends using this connection for all data transmissions because:
   a. More measured data is accessible through the network connection.
   b. Software and calibration file updates can be done remotely.
4. Serial Communication: Connector JP3 on the CPU interface PWA (printed wiring board #08017-1) is the RS-232 and RS-422 serial communication interface. The configuration information for a RJ-11 to DB-9 adapter is shown in Table 1 and Figure 5.

Table 1: RJ-11 to DB-9 Module Adapter

RS-232 CONFIGURATION				RS-422 CONFIGURATION			
RJ-11 Pin Out		DB-9 Pin Out		RJ-11 Pin Out		DB-9 Pin Out	
1	Tx (transmit)	1	N/C	1	Tx+ (transmit+)	1	Rx- (receive-)
2	N/C	2	Tx (transmit)	2	Tx- (transmit–)	2	Rx+ (receive+)
3	Rx (receive)	3	Rx (receive)	3	Rx+ (receive-)	3	Tx+ (transmit+)
4	N/C	4	N/C	4	Rx- (receive-)	4	N/C
5	Power (+5V)	5	Ground	5	Power (+5V)	5	Ground
6	Ground	6	Pulled high	6	Ground	6	Tx- (transmit-)
		7	N/C	7		7	TBD
		8	Pulled high	8		8	TBD
		9	N/C	9		9	TBD

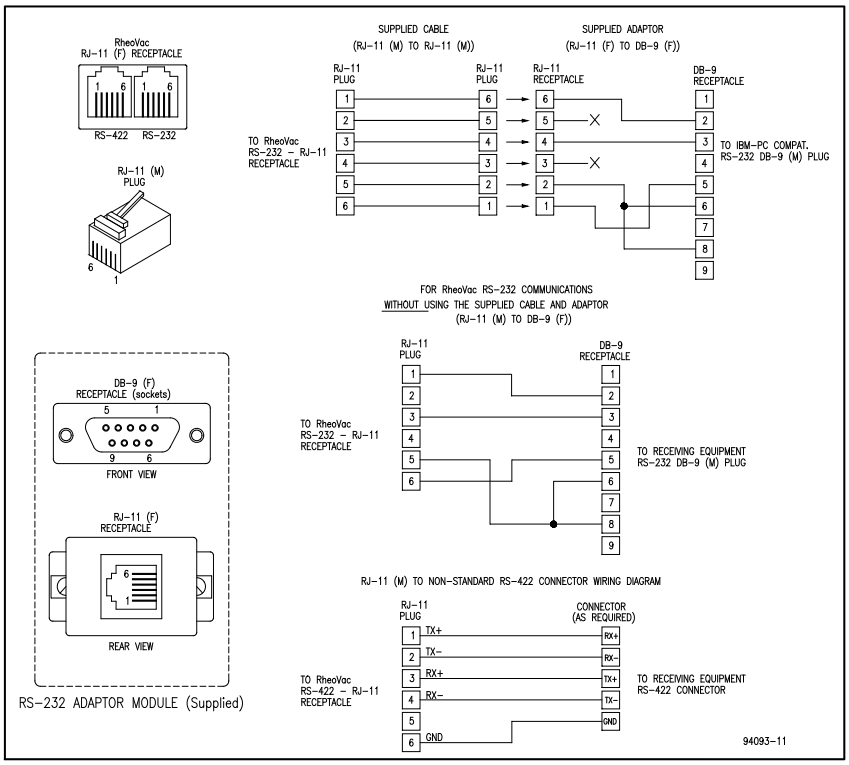

Figure 5: Serial communication interface

2.2.2 Satellite Electronics (only provided with systems that have several instruments)

1. Transmitter(s) Power/COM: A DeviceNet 5711 cable is used for RS485 communication and power for all transmitters. The color code for this cable is: ***RS-485 communications***: white (A), blue (B) and shield (SH); ***power***: 24Vdc, red (+), and black (–).
2. Power: Power connection wires should be at least 18 AWG. Connect power terminals to a dedicated 120 or 240 VAC, single phase, 15-amp circuit. A power switch is provided near the input power terminals.

2.2.3 Distribution Box (see Figure 6) – For distributing RS485 communication and 24VDC

1. Connect the provided DeviceNet 5711 cable from the main processor unit to screw terminal, JP1. The color code for this cable is: ***RS-485 communications***: white (A), blue (B) and shield (SH); ***power***: 24Vdc, red (+), and black (–).
2. Install ½" conduit between the distribution box and probes. Intek recommends 6 feet of liquid-tight conduit between conduit and probes to minimize stress at the connector.
3. An adapter is provided which allows attachment of ½" flexible conduit to the connector.
4. Connect the probes to the distribution enclosure using the manufacturer supplied DeviceNet 5711 cable to the screw terminals labeled JP3 to JP6 (refer to Figure 6).
5. For systems with multiple distribution boxes, screw terminal JP2 will be used to connect to the JP1 screw terminal on the next distribution box in the series.
6. If no additional distribution boxes are used, ensure the outgoing termination resistor (JP7 or JP8) is enabled.

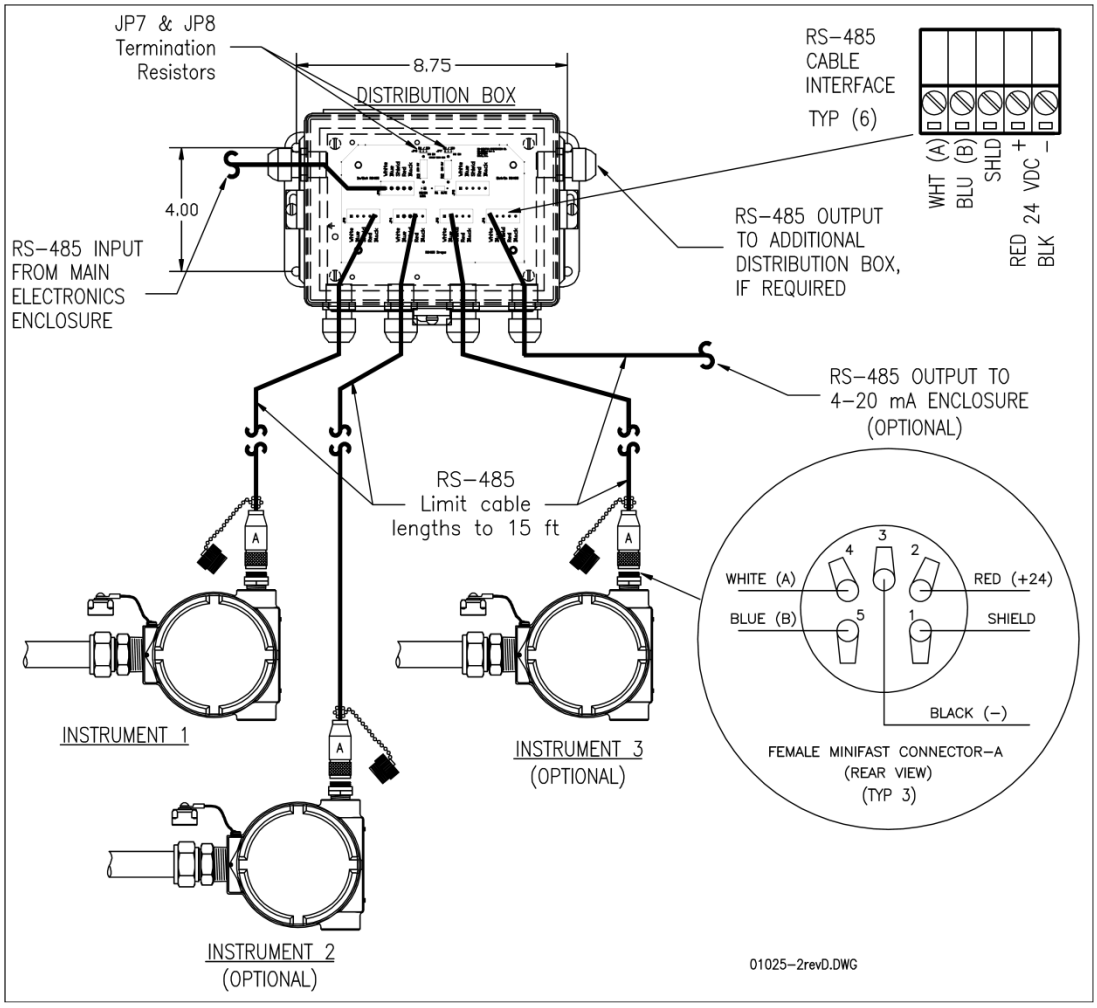

Figure 6: Distribution Box

© Intek, Inc. 2015

2.2.4 4-20mA Transmitter Box (optional) – For driving eight (8) remote 4-20 mA analog signals

The 4-20mA transmitter component is optional, see Figure 7. Note: Intek recommends using the network connection for all data transmissions and communications with the *RheoVac* MSP.

1. Connect the DeviceNet 5711 cable. The color code for this cable is: ***RS-485 communications***: white (A), blue (B) and shield (SH); ***power***: 24Vdc, red (+), and black (–).
2. Connect up to eight (8) signal wire pairs to the indicated terminals for isolated 4-20mA outputs.
3. CMS 4-20mA transmitters are configured as active (transmitter sources the current) when shipped. To change to the passive mode (receiver to source the current), extract each small 4-20 board, find the JP1 pins, and move the two jumpers from the "Act" pins to the "Pass" pins (two positions to the right of factory settings). Figure 8 shows the current output circuit. Figure 8 also illustrates the active mode and the passive mode configurations.
4. Refer to Section 4.1 for general information on standard transmitter channel-to-instrument output mapping. Refer to SECTION 8 - CUSTOM INFORMATION for transmitter channel-to-instrument 4-20mA outputs mapping.

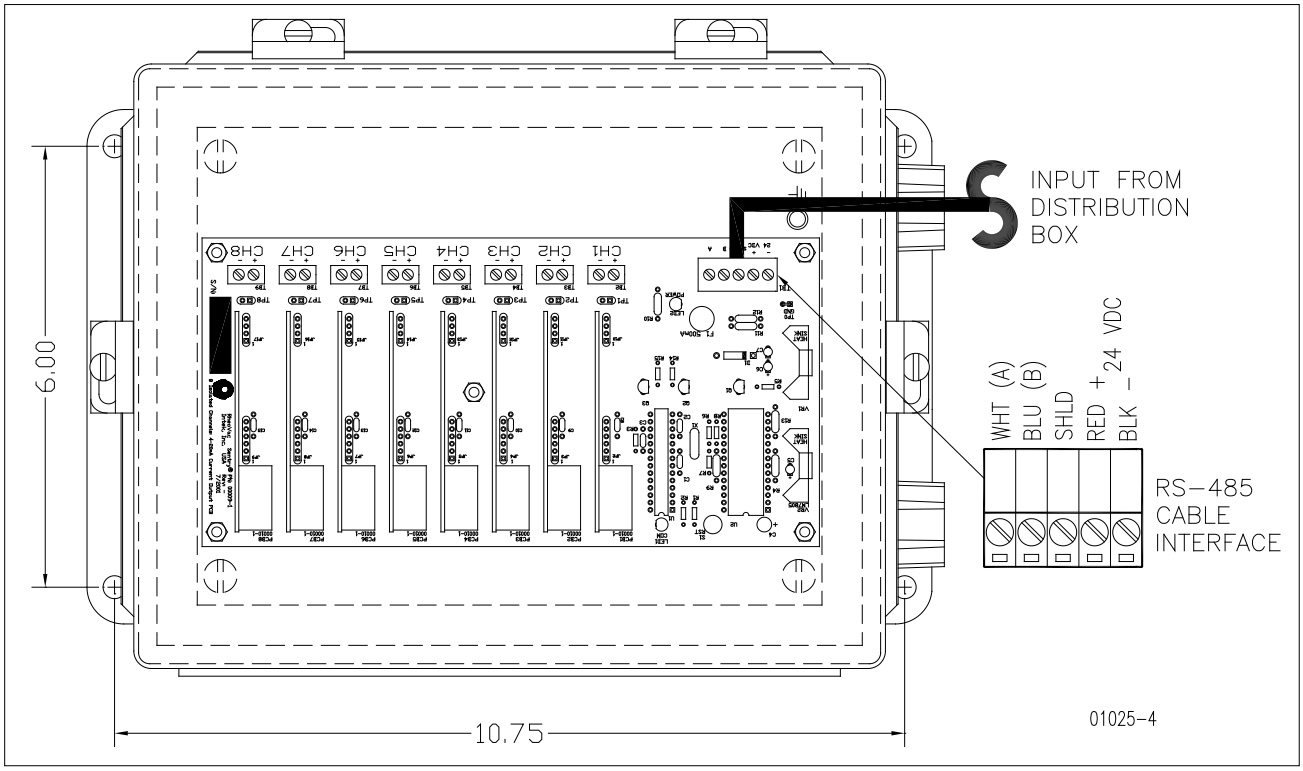

Figure 7: Optional 4-20mA Transmitter Box

© Intek, Inc. 2015

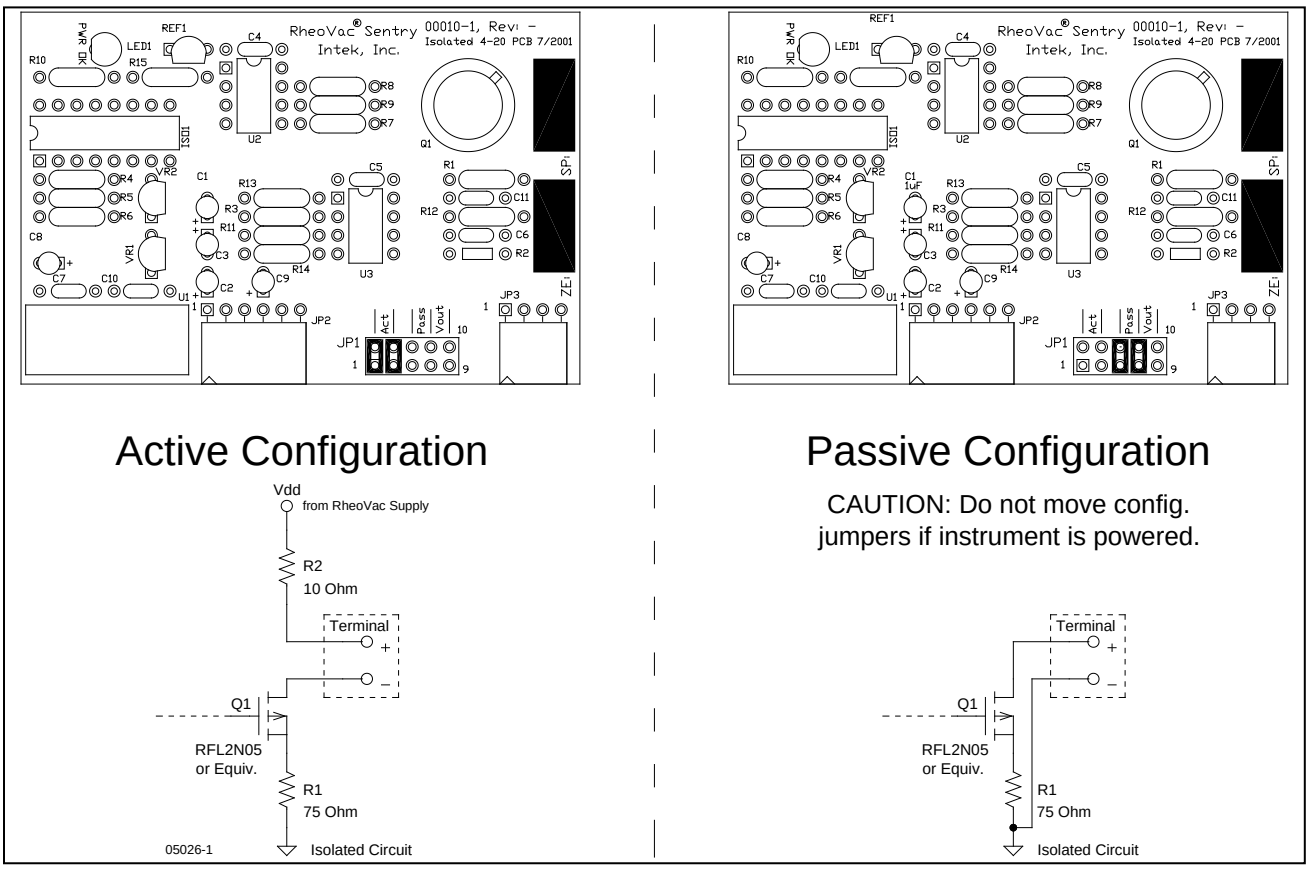

Figure 8: 4-20 mA output circuit

© Intek, Inc. 2015

2.2.5 *RheoVac* MSP and PT Probe Connector Assembly

CAUTION — Do not cross thread connection. The probe is supplied with a convenient plug-in connector; the male side of the connector is installed in the probe junction box. The female side must be installed onto the supplied DeviceNet™ type 5711 cable once it is run from the Distribution Box to the probe. The wiring detail for the female plug-in connector (Turck p/n B4151-0/9) is shown in Figure 9. These connectors will use either the "backshell nut" or "conduit connector" depending on whether the cable is installed in a liquid-tight conduit. When installing without conduit, use the backshell nut; when using liquid-tight conduit, use the conduit connector with o-ring.

1. Slide all of the appropriate parts onto the cable as shown.
2. Strip the cable conductors as shown. The connector has 5 retention screws to hold the wires in place. The use of crimp pins on the wires will greatly increase connection reliability.
3. Loosen all 5 retention screws (do not completely remove).
4. Insert the wires, in accordance with color-coding shown (see Figure 9, insert).
5. Tighten the retention screws on each wire.
6. Reassemble the connector parts.

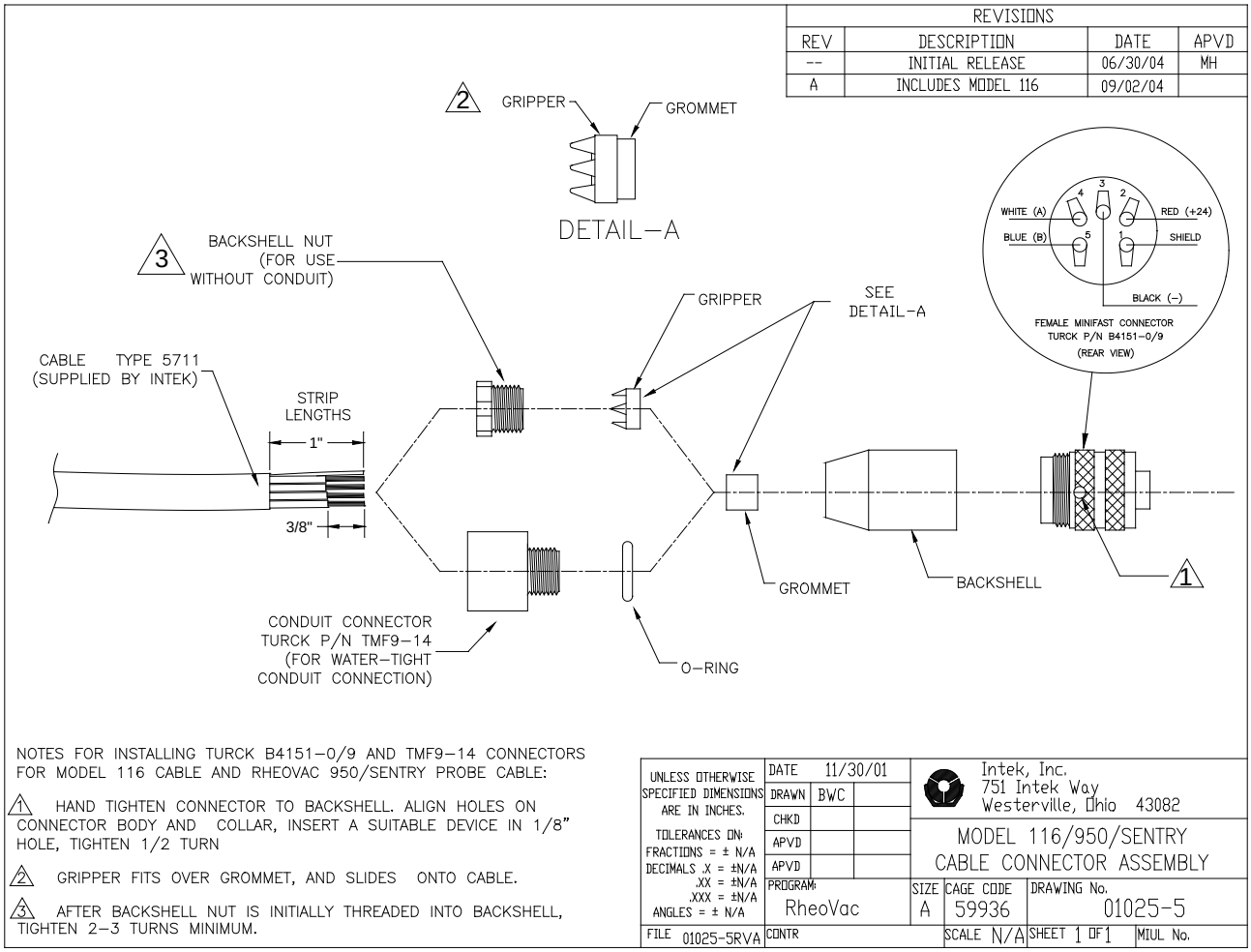

Figure 9: Probe connector assembly

2.2.6 *Rheotherm* CWFF Meters and Temperature Sensors Connections

These instruments are installed by Intek Inc. or under Intek Inc.'s supervision. Special instructions, where applicable, are provided by Intek (see SECTION 8 - CUSTOM INFORMATION). Electrical terminations, cable routing diagrams and more are provided in the CMS Installation Instructions document.

© Intek, Inc. 2015

SECTION 3 - USER INTERFACE AND DATA RETRIEVAL

This section presents the standard interface options and typical operations to retrieve data from the system.

3.1 MENUS

The standard Main Electronics enclosure for the system serves as a SCADA RTU and HMI. The standard enclosure has a 2x20 alphanumeric display and an access menu. Larger systems have a standard LCD display and optional touch screen interfaces. Pressing the (**Enter/Menu**) button brings up the access menu. The access menu has the following selections:

Data Download – Compresses data to the USB stick, if present, for data collection and transfer

Change Line Size – Change the line size of connected *RheoVac* MSPs. Typically, the factory sets this to the specified line size on the order. If a probe is moved to a different location, the user must check for line size and re-set this data as needed to ensure accurate measurement.

Shutdown System – Provides option to Shutdown or Reboot the system

Self Test – Runs self-diagnostic routine

Cancel – Exit the access menu

3.1.1 Downloading Data (to USB Stick)

The data stored in your CMS can be downloaded to a USB memory device, which is provided in the instrument's main electronics enclosure. Intek recommends having this USB stick disconnected from the main electronics during normal operations. All the data is stored by the instrument on its internal flash drive. Follow these steps when data needs to be retrieved and stored on the USB memory stick:

1. Insert the USB memory stick in the USB port, as shown. (Figure 10)

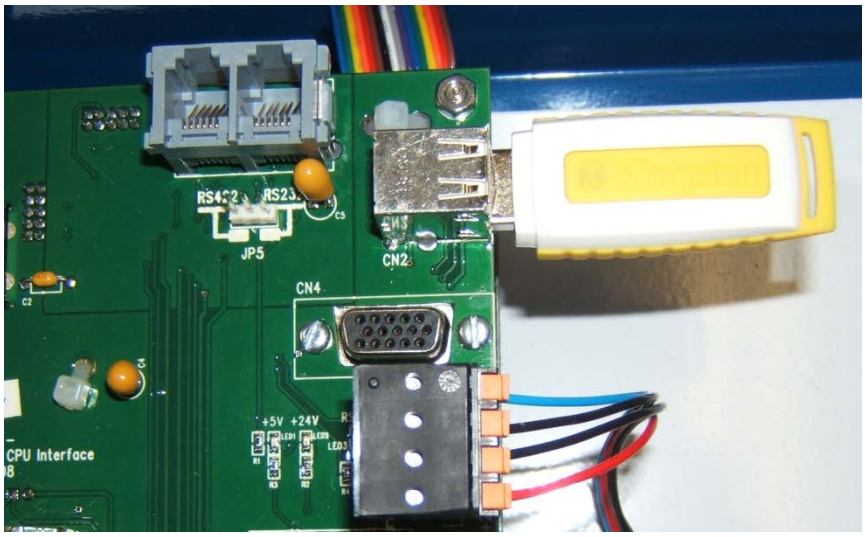

Figure 10: USB stick installation

2. On the front panel keypad, press Enter/Menu to bring up the access menu then press Enter/Menu again to start the Data Download. Alternatively, press all three buttons (**Left**+**Right**+**Enter/Menu**) at the same time and release to skip the access menu and start the Data Download directly. The Data Download will compress the entire CMS folder and save it to the USB stick. No other user interaction is required. Figure 12 shows the screens that will follow as data is compressed and copied to the USB memory stick.

LCD	Alphanumeric
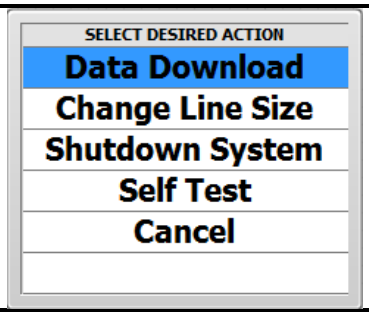	Menu Data Download

Figure 11: Access Menu with Compress Data Highlighted

LCD	Alphanumeric
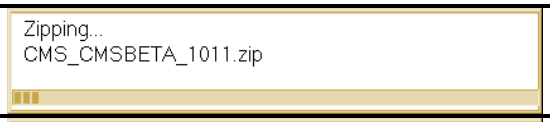	Compressing ...
	Copying to USB ...
	Copying to USB Copy Successful!

Figure 12: Compressing and copying screens

3. The file saved to the USB stick is automatically named based on the date of the download. The above example is shown in Figure 13.

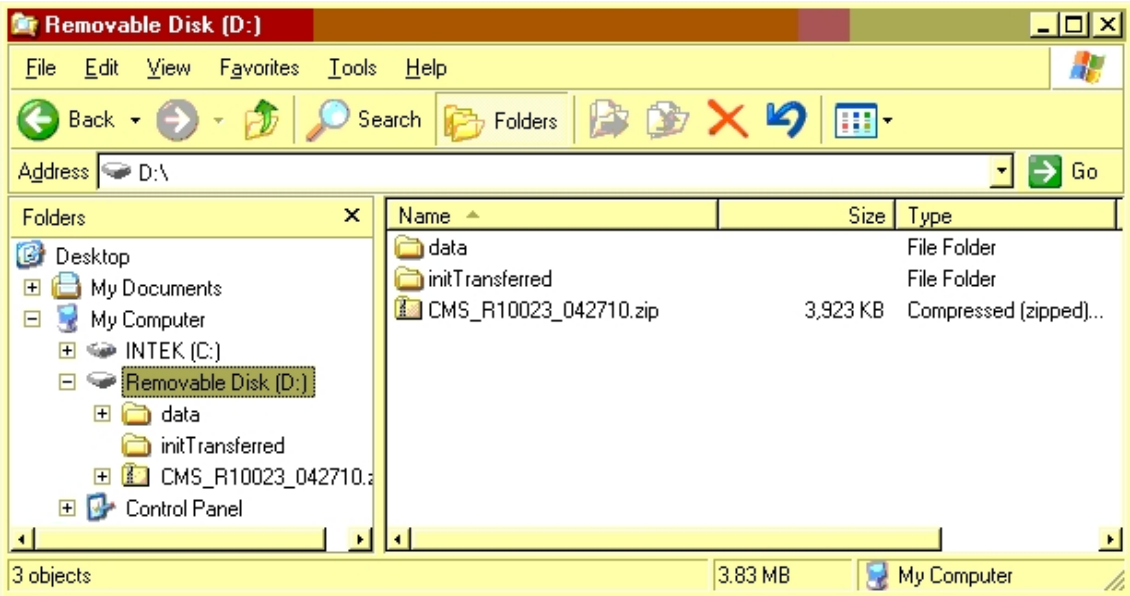

Figure 13: D-drive explorer view of zip file

4. Copy the CMS_(serial number)_(MMDDYY).zip file to a computer for analysis.. For further support email data and questions to techsupport@intekflow.com; a service contract or order may be required. The file may also be uploaded to Intek's server for review by Intek engineers. See Section 3.2 for uploading instructions.

3.1.2 Change Line Size (i.e., pipe diameter)

The CMS instruments are configured at the factory for the line size specified. This is shown in SECTION 8 - CUSTOM INFORMATION. If the probe is moved to a pipe with a different diameter then it is important to change the line size so that the instrument will adjust the measured velocity and report the correct volumetric flow rate. This is accomplished using the “Change Line Size” option.

The change line size menu can be accessed through the access menu. Use **Left** and **Right** to scroll through the options until Change Line Size is highlighted as shown in Figure 14. Then either wait for the timer to expire or press **Enter**.

LCD	Alphanumeric
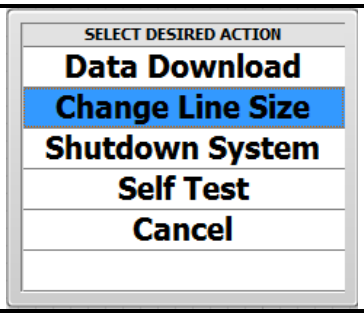	Menu Change Line Size

Figure 14: Access Menu with change line size highlighted

The change line size menu will appear. User selections will be shown on the bottom line and can be cycled through using the Left or Right buttons. Enter/Menu will select the shown option. The change line size steps are outlined in Figure 16.

The LCD screen is shown in Figure 15 and the 2x20 alphanumeric **Select Probe** and **Select Line Size** options are shown in Figure 16.

LCD


Figure 15: Change line size LCD dialog

Alphanumeric	
Step 1. Choose Probe Select to Continue	Line Size Menu
	Probe Select | Cancel
Step 2. Select Rheovac to change	Probe Select
	<Pick Rheovac Serial Number>
Step 3. Select new line size	Line Size Select
	<Pick Line Size>
Step 4. Confirm changes	Confirm Save? | Cancel?
	<Rheovac SN> - <Line Size>

Figure 16: Change line size 2x20 alphanumeric menu

3.1.3 Shutdown

The **Shutdown** command can be accessed through the 3 button menu. Use left and right to scroll through the options until **Shutdown** is highlighted. Then either wait for the timer to expire or press

enter. Then select either Shutdown, Reboot, or Cancel by pressing the enter button. A confirmation message will appear, press enter to accept. If using the LCD, the main application window will close and system diagnostics will run before the system reboots. If using the 2x20 alphanumeric, the screen will display **Rebooting** until the diagnostic software starts. The entire reboot process should take less than eight minutes to complete.

3.1.4 Cancel

The **Cancel** command can be accessed through the 3 button menu. Use left and right to scroll through the options until **Cancel** is highlighted. Then either wait for the timer to expire or press enter. **Cancel** will close the access menu.

© Intek, Inc. 2015

3.2 UPLOADING TO INTEK'S SECURE FTP SITE FOR DATA EVALUATION

The following instructions can be used to logon to Intek, Inc.'s Secure File Server to upload or download software, files, pictures, etc. An account must first be set-up to permit secure file data transfer.

1. Open any internet browser, i.e., Internet Explorer, Mozilla Firefox, Google Chrome, etc. Type http://sftp.intekflow.com into the address bar and hit enter. The following screens are shown using Internet Explorer.

2. To access your Private folder, please use the User ID and Password when you registered and set up your private account. Click the Login button.
3. Click OK at the Welcome screen.

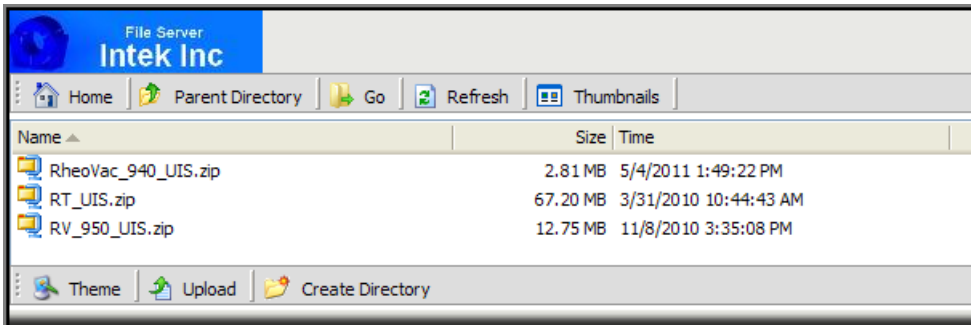

4. To upload a file, click the Upload button at the bottom of the screen.

5. Browse to the file to upload, and then click the Upload button. Click the Close button when finished.
6. For downloading, highlight (single left click) the file to download and click the Download button at the bottom of the screen.

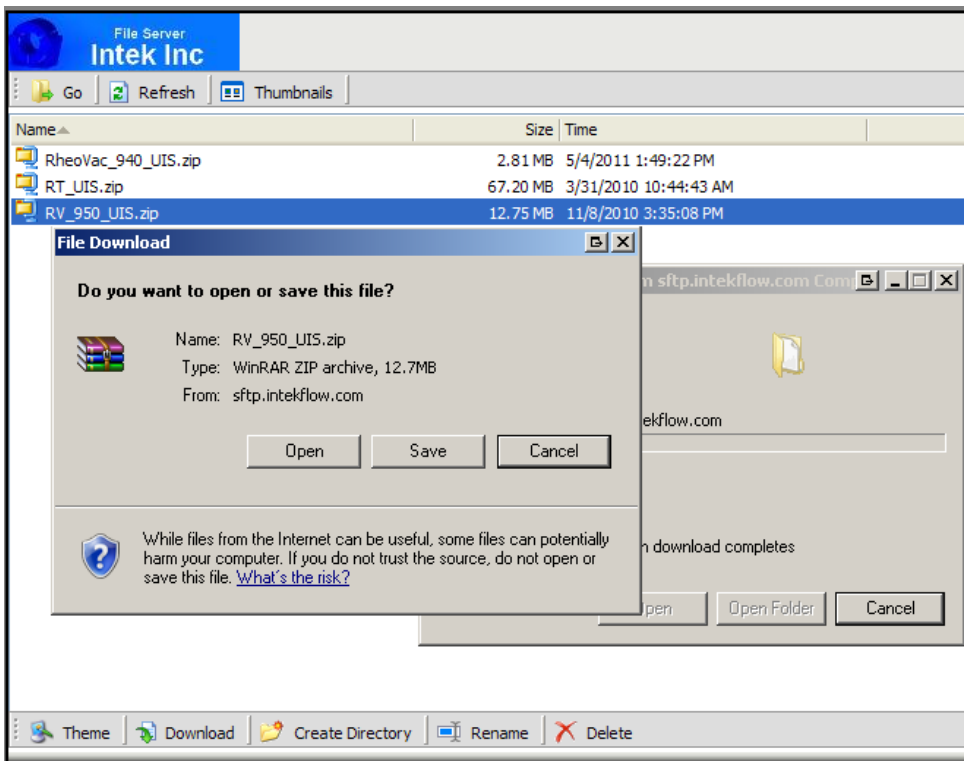

7. Click the Save button and select where to store the file.
8. When finished, click the Logout button at the top right of the screen.

© Intek, Inc. 2015

SECTION 4 - COMMUNICATION METHODS

The CMS system supports Modbus TCP (Modbus over Ethernet), RS232/422 serial Modbus and OPC communication protocols. Analog 4-20mA outputs can be supplied as an option. *Note: Intek recommends using the network connection for all data transmissions and CMS communications.*

4.1 ANALOG OUTPUT

All 4-20 mA output signals are linearly scaled such that 4 mA represents 0% of the rated full scale value (except temperature, which is 0°C) and 20 mA represents 100% of the rated full scale value (temperature is 100°C). See SECTION 8 - CUSTOM INFORMATION for custom outputs.

4.2 MODBUS

Modbus is a communication protocol that can be used to read process variables from the CMS system. This section demonstrates the basics of Modbus communication with the CMS.

Registers - Modbus stores variables in memory locations referred to as registers. Modbus is capable of storing variables as coils, discrete inputs, input registers, and holding registers. The CMS conserves memory space by not supporting coils or discrete inputs. This creates more space for holding and input registers whose type definition fits more closely with the CMS process variables. This modification does not affect the formation of a Modbus request packet, which is demonstrated in the packet section. However, if an attempt to poll the removed register banks is made a timeout error will occur.

Table 2: CMS input registers

Address	Type	Description
20 – 3999	PT	Read 16 bit registers (“input registers”)
4000 – 7999	FM	Read 16 bit registers (“input registers”)
8000 – 11999	TC	Read 16 bit registers (“input registers”)
12000 – 15999	RV	Read 16 bit registers (“input registers”)
16000 – 19999	CC	Read 16 bit registers (“input registers”)
20000 – 23999	MA	Read 16 bit registers (“input registers”)

CMS process variables are stored as IEEE 751 floating point numbers unless specified otherwise. Therefore, multiple registers must be used to account for the size of the floating point variables. Modbus protocol specifies that multiple registers containing floating point values are transmitted with the most significant byte of the register first.

Table 3: Multiple register example

Address	Variable	Description
24 - 25	Temperature	Temperature measured by the first referenced PT Probe

© Intek, Inc. 2015

Basic Function Codes - The Modbus packet structure is determined by the function code being performed. Some of the basic commands that CMS supports are shown in Table 4.

Table 4: Modbus function codes

Function	Hex Code
Read Holding Registers	03
Read Input Registers	04
Read Exception Status	07
Write Multiple Registers	10
Write Holding Register	06

Exception Packet Definition - If an error is detected in one of the following packet definitions a certain error code is applied and sent back in an exception response.

Table 5: Modbus error codes

Code	Description
01	Invalid function code – function code not supported by device
02	Invalid data address – address defined by the start address and number of registers is out of valid range
03	Invalid data value – number of registers = 0 or > 125

Table 6: Modbus exception response

Type	Byte Length	Example
Device address	1 Byte (1 – 247)	0x01
Function code	1 Byte (Function code + 0x80)	0x83
Exception code	1 Byte	0x01

© Intek, Inc. 2015

4.2.1 Modbus TCP

Modbus TCP is a way to communicate a Modbus packet over Ethernet. CMS implements a class 0 Modbus TCP communication standard. The CMS communicates Modbus TCP using port 502 with a configurable IP address. Modbus TCP communication can be broken down into three different layers, IP/Ethernet, TCP, and Modbus Protocol.

Table 7: Communication layers

IP Layer	IP Header				Trailer
TCP Layer		TCP Header		Trailer	
Modbus Layer			Modbus Packet		

The IP Header and Trailer dictate what IP address should receive the TCP Layer. The TCP layer contains which port to establish communication and the transmitted data. The transmitted data is a standard Modbus packet. There is no need for a slave address or CRC in Modbus TCP because these are handled by the IP and TCP Layers. Modbus TCP also allows for specification of a unit identifier in the Modbus Packet. The unit identifier functionality is not supported by CMS and should be defaulted to 1.

Connecting – To connect to the Modbus TCP server open any Modbus TCP client and enter the IP address of the CMS system. CMS uses the standard Modbus TCP port of 502. Allow at least 5 seconds for the CMS to initialize the Modbus connection. The minimum poll rate supported by CMS is 1 second.

4.2.2 Serial Modbus

4.2.2.1 Modbus server global settings

A number of global settings are used to configure the CMS serial Modbus server. Many of these settings can be adjusted by the end user to facilitate integration of a CMS with an existing Modbus network. Table 8 lists the CMS serial Modbus global settings and their default values.

The settings can be modified in two ways: either by modifying a configuration file within the CMS, (contact Intek for instructions), or by sending a properly formatted Modbus Function 06 message to write the address listed in Table 8.

Process variables (PVs) for each instrument are produced by the CMS serial Modbus server. These values take one of the two formats: multiplied integer or single float. The “Conversion Mode” (Register 0009) setting listed in Table 8 determines the data format used for the PVs. In multiplied integer mode, the CMS data values are multiplied by a power of ten specified in a set of additional registers. The resulting values are then transmitted as 16-bit unsigned integers. In single float mode, all of the data values are converted into a 4-byte hexadecimal string corresponding to their single-precision float representation.

© Intek, Inc. 2015

Table 8: Modbus server global settings

Address	Description	Allowed Values	Default	Format	Read Only?
0001	Restart Modbus Server	Write '1' to restart	0	16-bit unsigned	No
0002	CMS Serial Port	Set to '0' internally by CMS System	0	16-bit unsigned	Yes
0003	Baud Rate	2400,4800,9600,14400, 19200 bps	9600	16-bit unsigned	No
0004	Data Bits	7 or 8	8	16-bit unsigned	No
0005	Stop Bits	0 = 1 stop bit 1 = 1.5 stop bits 2 – 2 stop bits	2	16-bit unsigned	No
0006	Parity	0 = No Parity 1 = Odd Parity 2 = Even Parity 3 = Mark Parity 4 = Space Parity	0	16-bit unsigned	No
0007	Modbus Address	1 – 255	1	16-bit unsigned	No
0008	Communication Mode	0 = RTU 1 = ASCII	0	16-bit unsigned	No
0009	Conversion Mode	0 = Multiplied Integer 1 = Single Float	1	16-bit unsigned	No
0010	Number of Probes	1 – 255	1	16-bit unsigned	Yes

4.2.2.2 Modbus data settings (Multiplied Integer Mode)

The values listed in Table 9 are examples of how the Modbus server stores "Multiplied Integer". "Multiplied Integer" mode can be enabled by writing a "0" to register 09. The address for the multiplier is the holding register equivalent of the input register parameter it is multiplying. These register values determine the power of 10 that is used to multiply each parameter (effectively shifting the decimal point) before it is transmitted as a 16-bit unsigned integer.

Table 9: Modbus example data holding registers

Address	Description	Allowed Values	Default	Read Only?
8001	Multiplier power for TC1-1	0 – 3	16-bit unsigned	No
12005	Multiplier power for *RheoVac* MSP Actual Volume Flow	0 – 3	16-bit unsigned	No
12007	Multiplier power for *RheoVac* MSP Total Mass Flow	0 – 3	16-bit unsigned	No
12009	Multiplier power for *RheoVac* MSP Water Vapor Flow	0 – 3	16-bit unsigned	No

4.2.2.3 Modbus data registers (Multiplied Integer Mode)

When in Multiplied Integer Mode, the CMS data values are multiplied by a power of ten specified in the registers listed in Table 9. The resulting values are then transmitted as 16-bit unsigned integers. Each value therefore needs only 1 register (2 bytes) of allocated space. In this mode, the data registers are allocated in pairs, with each data value followed by the multiplication power corresponding to it. For example, assuming all multiplier registers are set to 3, the *RheoVac* MSP Pressure is transmitted as follows:

RheoVac MSP Pressure (probe reading) = 1.257
Input Register 12011 (*RheoVac* MSP Pressure) = 1257
Holding Register 12011 (Multiplier Value) = 3

All other instruments can be calculated the same way substituting the correct address in place of 12011. The addresses for each instrument can be found in SECTION 8 - CUSTOM INFORMATION.

© Intek, Inc. 2015

4.2.2.4 Modbus data registers (Single Float Mode)

In Single Float mode, all of the data values are converted into the 4-byte, big-endian hexadecimal string corresponding to their single-precision float representation. The Modbus client program must be capable of converting these 4-byte values back into single-precision float values. If the client software is unable to make this conversion, the Multiplied Integer mode must be used. Data in the Single Float mode is transmitted as follows:

RheoVac Pressure (probe reading) = 1.257
Single-Float Hex Representation = 0x3FA0E560
Input Register 12011 (high word) = 0x3FA0
Input Register 12012 (low word) = 0xE560

The full list of addresses for each MSP probe can be found in SECTION 8 - CUSTOM INFORMATION.

4.2.3 Modifying the Modbus Configuration File

To modify the configuration file, the CMS must be attached to a local network. Once connected, Windows Explorer can be used to browse into the CMS similar to a PC. Using the Network ID or IP (see SECTION 8 - CUSTOM INFORMATION) of the CMS, the Modbus settings file can be found at the following location:

\\<Network ID or IP of the CMS>\CMS\init\serial.ini

Figure 17 shows a sample serial.ini file. The Modbus settings are listed under the section titled "[Modbus]". The multiplied Integer settings can be found in the file MDBSInts.dat. The first column is the starting register and the second is the power of 10. These values can be changed to fit the needs of the existing serial Modbus network. Once the changes have been made and the file has been saved in its current location, the CMS must be rebooted by simultaneously pushing all the keypad buttons to activate the "Reboot System" function for the changes to take effect.

CAUTION: Modifying any of the other settings in this file could result in undesired behavior.

serial.ini

```
[Modbus]
PortNumber = "\00\00\00\04COM1"
BaudRate = 9600
DataBits = 8
StopBits = 2.000000
Parity = 0
Address = 1
Mode = 0
Conversion = 1
```

Figure 17: Sample serial.ini file

© Intek, Inc. 2015

4.2.4 Modbus Troubleshooting

Problem	Cause	Solution
No response from CMS	1. System not set for Modbus communication 2. Incorrect Modbus settings 3. Improper wiring	1. Verify settings in serial.ini file, see Table 8 2. Verify wiring connections
Not enough data resolution in Multiplied Integer mode	1. Non-optimal multiplier values set	1. Change the multiplier values in the MDBSInts.dat file
Multiplier values are changing	1. The CMS has overflow protection built in. When [process variable]*[multiplier value] exceeds 65535, the instrument automatically lowers the multiplier value to retain a usable output.	1. Request the multiplier value along with process data rather than hard coding the multiplier value in the client software 2. Lower the multiplier value for each process variable that reaches the overflow state 3. Use single precision float mode instead of multiplied integer mode

© Intek, Inc. 2015

4.3 OPC – (OLE for Process Control)

CMS is equipped with an OPC data server which can publish its process variables across an Ethernet network. The CMS software is compliant with OPC version 2.0. When using OPC we recommend the use of a NTP network time server to ensure the CMS time is synchronized with the client system.

4.3.1 Connecting

The following information can be used to connect and view the process variables using an OPC Client. Please be sure to properly configure any firewall to allow OPC communication.

OPC Server Name = OPC_Intek-exe

Remote Machine Name = <CMS IP> or <CMS Network Name>

Client DCOM Settings

Authentication Level: None

Impersonation Level: Identify

Security: Default

4.3.2 Adding Process Variables

Once connected to the CMS system there will be a tree view of the available process variables organized by instrument type. Select or expand the type of instrument you would like to view outputs from (FM, PT, RV, TC, MA, etc). Then select or expand the specific instrument you would like to monitor. Each instrument contains at least one process variable denoted by PV#. PV# will then have a series of sub values either Label, Units, and/or Value depending on the instrument type. These sub values can be added to a group or viewed individually to get the current outputs of the desired instrument. Other variable options are available and vary by client. Please consult your OPC client manual for more specific settings.

A flow meter (FM) outputs two process variables marked as PV1 and PV2. An example to view the current information for PV1 flow meter 12345-1 is shown in Table 10. A complete list of all OPC published variables can be found in SECTION 8 - CUSTOM INFORMATION.

Table 10: Process variable example

FM/12345-1/PV1/Label	Flow
FM/12345-1/PV1/Units	FPS
FM/12345-1/PV1/Value	21.4

© Intek, Inc. 2015

SECTION 5 - TROUBLESHOOTING

The CMS will identify problems by alternately flashing a message code and the serial number of the instrument affected. Table 11 provides a guide to identify causes of problems and determine appropriate actions to resolve the observed problems. If problems are encountered and factory assistance is desired, please contact the factory.

Table 11**:** Troubleshooting/message code guide (diagnostic messages)

MESSAGE CODE *Description/Symptom*	PROBABLE CAUSE	ACTION	OUTPUT ERROR CODES
Global Message Codes			
MSG-0 *Communications not being received from probe(s)*	1. Improper cable hookup 2. Blown main fuse 3. Failed RS-485 circuit 4. Damaged flow sensor	1. Verify plug-in connector is properly mated 2. Check F1 fuse on probe board 3. Check all cable connections 4. Contact factory	-99
MSG-1 *Invalid data received from probe(s)*	1. Failed RS-485 communications component	1. Check wiring 2. Contact factory	N/A
***RheoVac* MSP Messages Codes**			
MSG-2 *Flow sensor heater "OFF"*	1. Blown heater fuse 2. Failed electronic component	1. Contact factory	N/A
MSG-3 *RS sensor power "OFF"*	1. Probe temperature too high 2. Liquid water on probe tips	1. Check that probe temperature is <160°F 2. Contact factory	N/A
MSG-4 *RS heater "OFF"*	1. Component failure	1. Contact factory	N/A
MSG-5 *Circuit issue*	1. Problem with circuitry	1. Contact factory	N/A
MSG-6 *Temperature alarm (above 210°F/99°C)*	1. Steam in exhaust pipe	1. Remove probe or cool line **ASAP!** 2. Once line has cooled down and probe is reinstalled, check unit for proper function	N/A
MSG-7 *Wet probe*	1. Liquid water on probe tip	1. Remove probe **ASAP!** 2. Contact factory	N/A
MSG-8 *RS sensor problem*	1. RS sensor problem	1. Remove from line, allow 24 hrs with power on to dry out RS sensor, reinsert probe 2. Contact factory	N/A
MSG-9 or *(CalX)* *Calibration expired*	1. Probe calibration is expired	1. Contact factory for recalibration	N/A
Mass flow output saturates ***high***, will not respond to flow changes	1. Flow rate is not within range of calibration 2. Blown heater fuse 3. Failed electronic component	1. Contact factory about re-ranging instrument 2. Contact factory	N/A
Mass flow output saturates ***low***, will not respond to flow changes	1. Flow rate is not within range of calibration 2. Failed electronic component	1. Contact factory about re-ranging instrument 2. Contact factory	N/A

© Intek, Inc. 2015

MESSAGE CODE *Description/Symptom*	PROBABLE CAUSE	ACTION	OUTPUT ERROR CODES
PT Probe Message Codes			
MSG-2 *Reserved*			
MSG-3 *Reserved*			
MSG-4 *Reserved*			
MSG-5 or *(CalX)* *Calibration Expired*	1. Probe Calibration Expired	1. Contact factory for Recalibration	N/A
Flow Meter Message Codes			
MSG-2 *Reserved*			
MSG-3 *Reserved*			
MSG-4 Reserved			
MSG-5 *Sensor Issue*	1. No sensor communication 2. Irregular sensor data	1. Contact factory	-101
Thermocouple Message Codes			
Open *TC Circuit Open*	1. Loose connection 2. Broken wire	1. Check wiring at the electronics 2. Contact factory	-500
Under *TC Value Under Range*	1. Temperature below 32°F	1. Contact factory	-501
Over *TC Value Over Range*	1. Temperature above 212°F	1. Contact factory	-502
Error *General Error*	1. Loose connection 2. Component failure	1. Check wiring at the electronics 2. Contact factory	-504
MA (4-20mA DAQ) Message Codes			
Open *MA Circuit Open*	1. Loose connection 2. Broken wire	1. Check wiring at the electronics 2. Contact factory	-500
Under *MA Value Under Range*	1. Output below range	1. Contact factory	-501
Over *MA Value Over Range*	1. Output above range	2. Contact factory	-502
Error *General Error*	1. Loose connection 2. Component failure	1. Check wiring at the electronics 2. Contact factory	-504

© Intek, Inc. 2015

5.1 COMMON ISSUES

Modbus/OPC client loses communication on/after midnight

The CMS system is designed to perform an automatic daily maintenance reboot. It takes approximately 5-8 minutes for the system to return to normal operation. We recommend that digital communication clients use an extended timeout value of 8 minutes or greater to prevent midnight reboot timeouts.

Modbus/OPC data is not updating

The digital outputs update once every minute. Requesting data faster than one minute will result in duplicate data points. Intek recommends setting the poll or scan rate of data acquisition system to one minute.

© Intek, Inc. 2015

SECTION 6 - MAINTENANCE GUIDE

This section provides a guide for typical operations interaction with the components of the CMS.

6.1 WATERBOX INSTRUMENTS

Intek recommends, at a minimum, annual inspection of the CWFF meter IDs and integrity of the coatings. CMS instruments are installed into cooling water systems that have widely varying debris controls and water chemistry controls. It is important to schedule maintenance inspections of the CWFF meter IDs and integrity of the coatings. It may be convenient to conduct these inspections at the same time as regular waterbox cleanings.

The CWFF meters should be cleaned during each waterbox cleaning. A wet standard bottle brush can be used to remove mud and dirt. If scale is present then acetic acid (vinegar) can be used with the bottle brush to remove the scale. Thoroughly flush with fresh water after cleaning, do not allow acetic acid to remain in tubes. Never use abrasive tools to clean the meters.

If repair of coating/recoating is necessary, ensure that the surface to be coated is thoroughly cleaned using appropriate means for removing dirt, grease and debris in accordance with coating manufacturer's recommendations. Apply repair coating in accordance with manufacturer's recommendations.

Intek offers services to repair, recoat and clean waterbox instruments.

6.2 CALIBRATION

All instruments are calibrated at the factory using NIST traceable standards. The waterbox sensors can be checked in the field and adjusted with factory equipment. *RheoVac* vent line condenser and air in-leak monitors can only be calibrated at the factory. **Recommended recalibration schedule is every 2 years for all instruments.** The CMS user interface and calibration files can be updated via uploads from a USB memory device. Contact the factory for details at (614) 895-0301 or techsupport@intekflow.com.

6.3 SOFTWARE UPDATES

CMS systems are custom configured for the end user's system and intended purpose. Display changes, computation changes, calibration updates and general software updates are readily accomplished using USB file transfers. For specific instructions along with software updates, contact the factory for details at (614) 895-0301 or techsupport@intekflow.com.

6.4 ADDING/REPLACING SENSORS/INSTRUMENTS

The CMS delivers 24V to power instrument electronics and RS-485 for instrument communication. Flow, pressure, temperature, humidity/dew point and multi-sensor instruments can be added to the system if desired. Contact the factory for specifics at (614) 895-0301, or sales@intekflow.com.

© Intek, Inc. 2015

SECTION 7 - CUSTOMER SERVICE

Intek's corporate philosophy is to help solve our customers' difficult flow measurement problems. When you purchase a CMS system you also receive Intek's dedicated customer service. For sales or product service, call your local representative or Intek directly at (614) 895-0301 8AM to 5PM EST/EDT weekdays or fax us anytime at (614) 895-0319. E-mail inquiries should be sent to sales@intekflow.com or techsupport@intekflow.com. Our customer service staff will provide assistance promptly. To allow us to help you more efficiently, please have the complete serial number of the equipment available.

7.1 TROUBLESHOOTING

If you have reviewed SECTION 5 TROUBLESHOOTING and have questions, please call our experienced engineers for assistance. In many cases we can solve a problem over the phone. Please provide as complete a description as possible of the problems encountered.

7.2 FACTORY AND FIELD SERVICE

If you request field service to help with condenser performance problems, Intek has, for a fee, experienced engineers who can be assigned to meet your needs. For CMS instrument related questions, if a problem cannot be solved over the phone, with your help, we will help you to determine if factory service or field service will be the best solution.

To request factory service on your instrument, a Return Material Authorization (RMA) and purchase order is required. Our customer service staff will assist you with the required information to return equipment for service. Use reasonable care in handling the *RheoVac* and PT probes. Do not bend the probes, damage the tips, or obstruct the sensing ports. If moving the unit, make sure the probe is adequately protected from foreign objects and damage during handling. When returning instruments/probes for factory service, be sure to carefully pack the instrument/electronics; extra care should be taken to protect the probes from damage in shipment. When possible, use the factory supplied PVC probe protection tube and custom shipping box for MSP and PT probes.

7.3 CONSULTING SERVICES

Intek has developed unique solutions for plants experiencing problems with dissolved oxygen, heat rate and excessive backpressure. We provide comprehensive condenser diagnostic and analysis services. Plant and CMS data can be transmitted to Intek for analysis and results are provided via electronic means or hard copy reports. Please call us to discuss your observations, concerns, and needs.

Intek has many years of experience helping customers solve their complex condenser problems. Intek's monitoring services ensure plants have expert assistance with collecting, interpreting, and reporting on condenser operations. In many cases, excess backpressure problems can be predicted before they have a limiting effect on power production. Contact your Intek sales team for a quotation to meet your specific needs, sales@intekflow.com.

For information on Intek's power plant instruments and services, such as a new CMS system, liquid or gas flow meter or flow switches, circulating water flow and fouling meters or condenser inspection, analysis, or monitoring services, contact the Intek technical sales department by phone/fax/email. Our staff will be pleased to answer all questions and provide information on our recommended solutions, instruments, or services, sales@intekflow.com.

© Intek, Inc. 2015

7.4 CONDENSER MANAGEMENT AND *RheoVac*/CMS TRAINING

Intek conducts Condenser Operations and Management workshops to educate professionals on *RheoVac* and *Rheotherm* instrumentation as well as condenser operations and fundamentals. At these workshops, degraded condenser performance is discussed including root cause analysis for poor performance and condensate chemistry issues. Approaches to diagnose problems and develop solutions are presented and discussed.

Several training tools and reference materials can be found on our website, www.MyCondenser.com. Tutorials can be found in the help menu, included are presentations on condenser theory, instrumentation, case studies, and services offered by Intek. Posted case studies show events and conditions captured by the *RheoVac* MSP condenser monitoring instruments and how the instrument helped troubleshoot or solve upset conditions. Case studies include information on pump issues, air in-leakage events, steam jet air ejector problems, and general condenser performance troubleshooting. Case studies captured by the *Rheotherm* Circulating Water Flow and Fouling Meters are also presented and discussed. Macrofouling, thermal stratification, circulating water pump degradation, and identification of condenser design deficiencies are highlighted.

© Intek, Inc. 2015

SECTION 8 - CUSTOM INFORMATION

This section contains information unique to the system delivered to the customer. It contains a record of the system components, information important to the installation of equipment and setup of data communication.

8.1 UNIT IDENTIFICATION AND CONFIGURATION

Model no.:_____

Serial no.:_____

Customer identification:_____

The marked (X) items denote the configuration of this unit as originally shipped from the factory.

Input Power: ☐ 100-250 VAC, 50/60 Hz

Outputs:

Digital: ☐ Ethernet Modbus

☐ Serial Modbus

☐ OPC

Time Server IP:_____

Analog: ☐ 4-20mA Output (see Section 4.1)

Wireless: ☐ WiFi Transmitter

Tablet HMI: ☐ CMS Manual and condenser documents in:_____

(See tablet manual for special information and instructions)

Data Access:

☐ Ethernet Network ID:_____

☐ Ethernet IP:_____

Portable Data Storage: ☐ Portable USB Data Storage Device

Enclosures:

☐ Main Electronics Box:_____

☐ Satellite Electronics Box:_____

☐ Distribution Box:_____

☐ 4-20mA Transmitter Box:_____

Cables:

☐ DeviceNet 5711 Cable (RS485):_____

☐ Cat5 Ethernet X-Over Cable - 10 ft

Ball Valve Assemblies: ☐ 1 ½" ball valve assembly:_____

Software: Windows OS; *CMS* system software version :_____

Summary of instruments included in this system:

☐ *Rheotherm* CWFF:_____Tube size:_____Sch:_____

☐ *RheoVac* Multi-Sensor Probes:_____Pipe size:_____Sch:_____

☐ PT Probes:_____

☐ Temperature Instruments:_____

☐ MA Instruments:_____

ΔP Instruments:_____

☐ Other:_____

© Intek, Inc. 2015

8.2 SPECIAL INFORMATION

Below is a list of special information, attached to this document, which is relevant to customer specific equipment.

- ☐ System configuration/layout recommendations
- ☐ High temperature *RheoVac* MSP installation instructions
- ☐ Wireless tablet manual
  - ☐ Special information included
- ☐ MODBUS register definition, example value(s) and units list
- ☐ OPC register definition, example value(s) and units list
- ☐ 4-20mA channel definition, example value(s) and units list
- ☐ Drawings of custom enclosures
- ☐ Custom system wiring diagrams

Important Information has been reviewed with the customer and is included in this manual.

Engineering:_____ Date:_____

Sales:_____ Date:_____

© Intek, Inc. 2015